Zenith–GE FM stereo system.

The design of the system in the UK has been conditioned by the need for backwards-compatibility with the previous monophonic (mono) system. A stereophonic broadcasting system requires two independent signals originating from left (L) and right (R) sources, to be reproduced independently at the receiver in L and R loudspeakers.

The system must also make it possible for existing monophonic receivers to extract a suitable signal for their single loudspeaker (definition of compatibility). The Zenith-GE system generates an FDM (frequency division multiplex) composite signal.

The L and R signals are combined to give (L + R) and (L – R) signals. (L + R) is necessary for mono receivers, and is a directly-obtained baseband signal. The (L – R) signal amplitude-modulates a 38 KHz subcarrier using a balanced modulator to generate a DSB/SC AM signal (for mono L – R = 0 and this part of the signal disappears). This is conservative on transmitter power. The composite multiplex signal frequency spectrum is as below :-

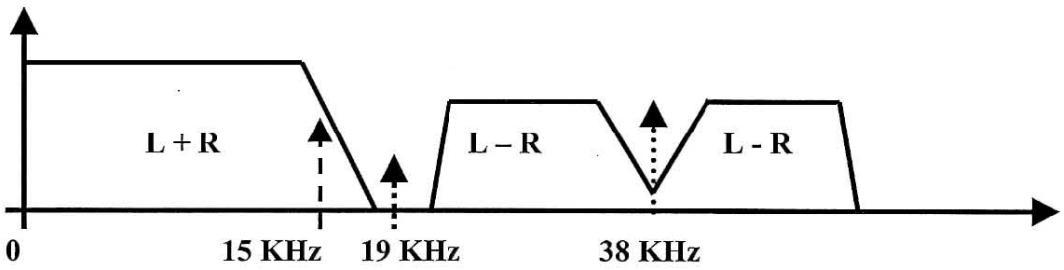

Operational amplifier adders give (L + R) and (L – R). The DSB/SC sidebands are combined with the (L + R) signal and a low level (9%) pilot tone at 19 KHz, as a frequency reference (half the 38 KHz necessary for DSC/SC demodulation).

L and R are complex, continuously-varying signals with no frequency relationship between them, i.e. instantaneous values may add or subtract. At some time (L + R), (L – R), and pilot tone will all be at their minima together. Hence it is necessary to limit (L – R) to 45% modulation, maximum. The extreme case is L = 1 , R = 1, and then (L + R)/2 never exceeds 90%

modulation [(L – R)/2 = 0], and the total modulation including pilot tone is not greter than 99% , i.e. 75 KHz deviation. This avoids bandwidth spread into other channels caused by over-modulation. It also avoids distortion at the receivers.

Recovery of (L – R) can be obtained by using a low-pass filter. It is necessary to re-insert the suppressed carrier at 38 KHz in the correct phase to recover the DSCB/SC (L – R) signal. The incorrect frequency would cause the (L – R) signal to vary in amplitude at the frequency of the error. Phase errors would cause attenuation of the (L – R) signal and therefore cause a reduction in the stereo effect.

A 19 KHz tone is used to regenerate the 38 KHz since it is easier to extract the 19 KHz in the spectral gap between the (L + R) and (L – R) signals than to extract a 38 KHz carrier amongst the sidebands of the (L – R), which may be as close as ± 30 Hz away. The nearest signals to the 19 KHz pilot are around ± 4KHz away, in comparison. Thus, the base bandwidth of the whole composite stereo signal is around 53 KHz (Upper frequency limit is 38 KHz + 15 KHz = 53 KHz), though only 15 KHz of this is true baseband signal. By Carson's rule, the required bandwidth of the FM transmitter is thus :-

$$\mathbf{B = 2 . [f_a (max) + f_m (max)]}$$

Where $\mathbf{f_a}$ **(max)** = 75 KHz and $\mathbf{f_m}$ **(max)** = 53 KHz i.e. B = 256 KHz. The receiver must have this bandwidth as well. The S/N advantage of FM is retained in this scheme, although stereo is more susceptible to noise than mono because of the larger effective bandwidth for stereo. The general principle is that more information is distributed across the spectrum, the better the SNR (Signal to Noise Ratio) (a form of "spread spectrum").

Signal power in the higher modulating frequencies is considerable less than in the lower modulating frequency components.

If the higher modulating frequency components are pre-emphasised relative to the lower modulating frequencies before transmission, and de-emphasised after reception and demodulation, the net effect on the signal is zero. Subjectively the background hiss caused by noise in the high audio frequencies is reduced in effect, because the received noise is de-emphasised in the subjectively-important frequency range. The degradation of the SNR is reduced by about 6.5 dB. CR networks with time constants of 50 μs are used to provide pre- and de-emphasis networks.

A receiver may take the typical form as below :

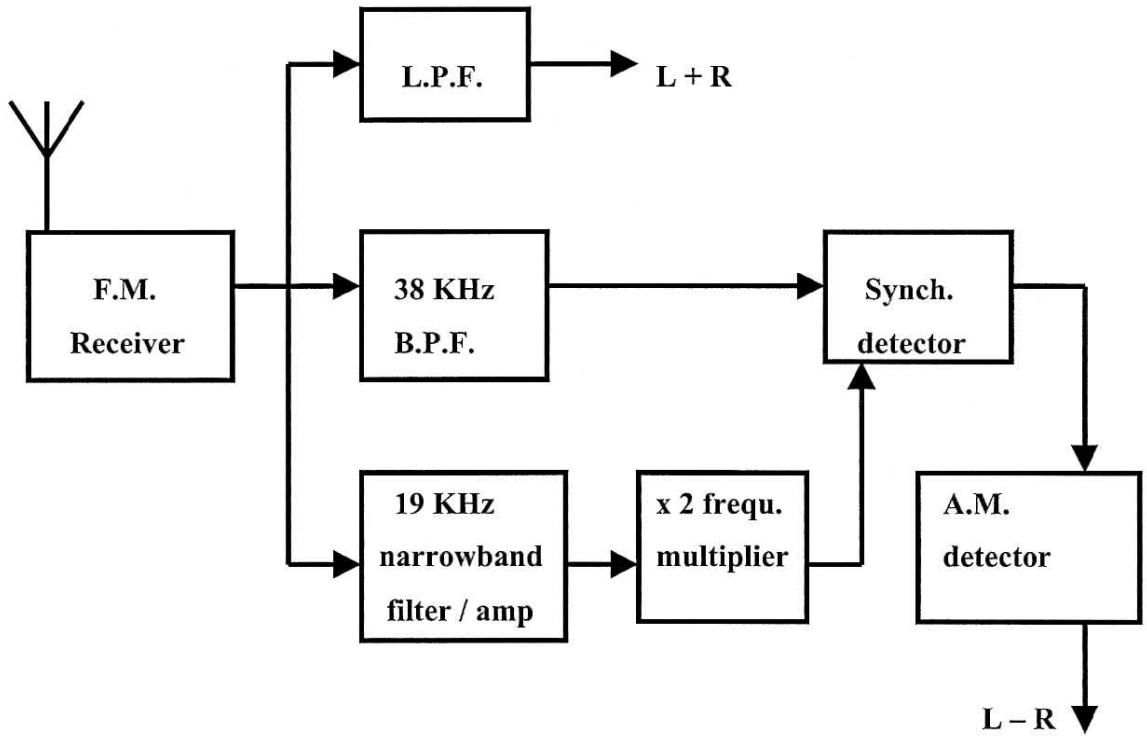

Superheterodyne receiver

This technique uses frequency translation downwards in order to detect a signal selectively :-

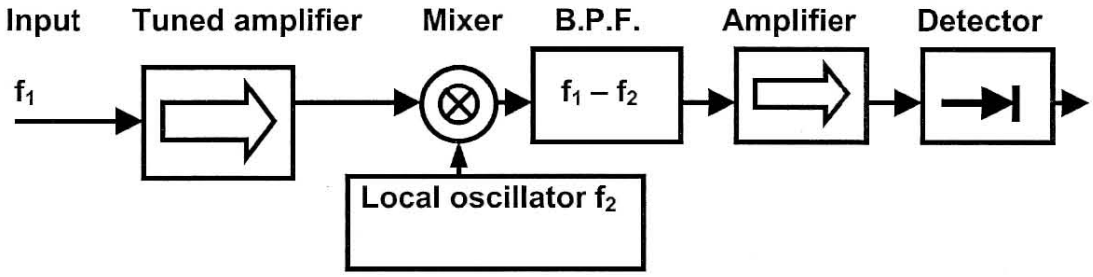

The mixer is a square law device of characteristic : -

$$V_o = k_1.v_i + k_2.\ v_i^{\ 2} + k_3.\ v_i^{\ 3} \ldots.$$

Where v_i is the input voltage defined by :

$$v_I = a_1.\cos\omega_1 t + a_2.\cos\omega_2 t$$

and ω_1 corresponds to f_1 etc. The effect of the multiplication is to create a range of frequencies, at f_1 , f_2 , $f_1 - f_2$, $f_1 + f_2$, etc. If the assumption is made that the mixer is a perfect square law device, then its output is :

$$V_o \quad = \quad k_2.\ v_i^{\ 2} \quad = \quad k_2.\ [\ a_1.\cos\omega_1 t + a_2.\cos\omega_2 t\ ]^2$$

Therefore : -

$$V_o = k_2.[\ a_1^2.\cos^2\omega_1 t + 2\ a_1 a_2.\ \cos\omega_1 t.\cos\omega_2 t + a_2^2.\cos^2\omega_2 t\ ]$$

$$= \quad k_2 \{\ 0.5a_1^2\ (1 + \cos 2\omega_1 t)$$

$$+ a_1 a_2\ (\cos\ (\omega_1 + \omega_2)t + \cos\ (\omega_2 - \omega_1)t)$$

$$+ 0.5a_2^2\ (1 + \cos 2\omega_2 t)\ \}$$

This process therefore generates a DC term :-

$0.5.\ k_2\ (a_1^2 + a_2^2)$ i.e. a function of the joint signal levels.

There is also a term at $(\omega_1 + \omega_2)$, being $k_2 a_1 a_2\ .\cos\ (\omega_1 + \omega_2)t$, and an equivalent term at $(\omega_2 - \omega_1)$, being $k_2 a_1 a_2\ .\cos\ (\omega_2 - \omega_1)t$. In addition, other high frequency terms are produced, which are :-

$$0.5k_2 (\ a_1^2\cos 2\omega_1 t + a_2^2\cos 2\omega_2 t\ )$$

Clearly, a bandpass filter, centred at $\omega_2 - \omega_1$, eliminates all the unwanted frequencies. For example, suppose a signal at 540 KHz is being received, and

the difference frequency is 440 KHz (= I.F. = **I**ntermediate **F**requency) , then there is choice over the local oscillator frequency f_2. This can be 0.1 MHz , or 980 KHz. If, as another example, a signal at 1.6 MHz is to be received, then the local oscillator must tune from 1.16 MHz , or 2.04 MHz . Therefore, the local oscillator either tunes from 0.1 MHz to 1.16 MHz , or from 1.6 MHz to 2.04 MHz. The latter is usually chosen because a smaller percentage range of frequencies is required from the Local Oscillator [$(f_{max} - f_{min})/ f_{max}$ is 0.91 in the first case and 0.21 in the second case]. This smaller range is easier to achieve in practice.

A problem that always occurs in heterodyne systems is *Image Response*. Suppose a system has a local oscillator at 5 MHz, with an IF at 0.5 MHz . Two signals can be equally obtained to generate the required IF, being (a) 5.5 MHz and (b) 4.5 MHz . The receiver has to somehow differentiate between these, and this is usually achieved by having the input first stage amplifier tuned in synchronism with the adjustment of the frequency of the local oscillator. This is called *Tracking*.